CIRC

A-3722

493037222

Metallic wall lamp with glass shade and an integrated dimmable LED providing direct and indirect light.

Aplique metálico con pantalla de cristal y LED regulable integrado que proporciona luz directa e indirecta.

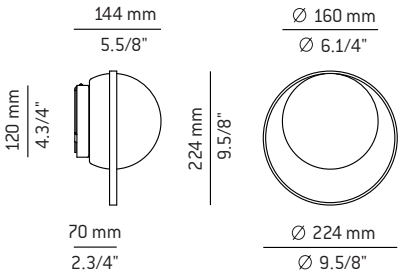

Warning

PRODUCT IS TO BE INSTALLED BY A QUALIFIED ELECTRICIAN ONLY
LE PRODUIT DOIT ÊTRE INSTALLÉ PAR UN ÉLECTRICIEN QUALIFIÉ UNIQUEMENT
EL PRODUCTO DEBE SER INSTALADO SOLO POR UN ELECTRICISTA CUALIFICADO

WE RECOMMEND TO READ THE INSTRUCTIONS ENTIRELY BEFORE BEGINNING THE INSTALLATION
PLEASE SAVE THE INSTRUCTIONS FOR FUTURE REFERENCE
* Make sure the power has been disconnected before installing the fixture.
* For indoor use only.
* Do not use alcohol or solvents to clean the lamp
* For your convenience, assembly by two people is recommended.

The light source of this luminaire is not replaceable.
Once the light source's lifecycle ends, you may contact the manufacturer.

LE RECOMENDAMOS LEA LAS INSTRUCCIONES ANTES DE PROCEDER A LA INSTALACIÓN
GUARDE LAS INSTRUCCIONES PARA FUTURAS REFERENCIAS
* Asegúrese de que la corriente está desconectada antes de conectar el aparato.
* Unicamente para uso en interiores.
* Para limpieza no utilizar alcohol ni disolventes
* Recomendamos la intervención de 2 personas para el montaje de la lámpara.

La fuente de luz de esta luminaria no es reemplazable.
Cuando la fuente de luz alcance el final de su vida, debe ponerse en contacto con el fabricante para su reparación .

UL 1598 ELECTRICAL INSTRUCTIONS FOR FLUSHMOUNTS, WALL SCONCES AND PENDANTS

SAVE THESE INSTRUCTIONS. MIN 90C SUPPLY CONDUCTORS. CAUTION-RISK OF FIRE. USE STATED WATT OR SMALLER. CAUTION-RISK OF SHOCK. DISCONNECT POWER BEFORE SERVICING. TO REDUCE THE RISK OF A BURN DURING RELAMPING, ALLOW THE BULB TO COOL DOWN. SUITABLE FOR DAMP LOCATION. THIS PRODUCT MUST BE INSTALLED IN ACCORDANCE WITH THE APPLICABLE INSTALLATION CODE BY A PERSON FAMILIAR WITH THE CONSTRUCTION AND OPERATION OF THE PRODUCT AND THE HAZARD INVOLVED.

WARNING: ALL WIRES AND WIRE NUTS USED IN THE INSTALLATION MUST BE RATED 195F (90ºC). FOR INDOOR USE ONLY. THESE PRODUCT MUST BE INSTALLED BY A QUALIFIED ELECTRICIAN.

Assembly instructions / Instrucciones

1 - Unscrew the lateral screws from the canopy (A). Remove the mounting bracket (B). Figure 1

1 - Desenroscar los tornillos laterales del tapapared (A). Liberar la sujeción (B). Figura 1.

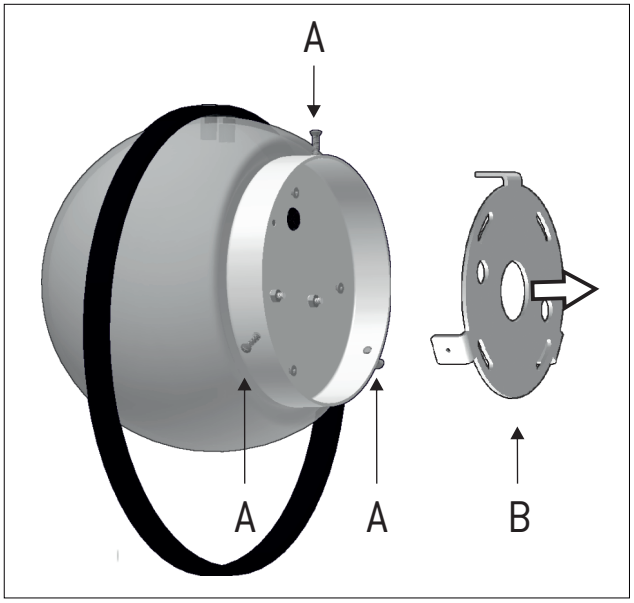

Figure 1

2 - Insert the electrical wires through the mounting bracket (B) and fix it to the wall.
Attention: place the **UP label** to the top and make sure that the side tabs are at the same level (C). * Use a level if it is necessary.
Figure 2.

2 - Pasar los cables de la red eléctrica por el interior de la sujeción (B). Atornillar la sujeción (B).
Atención: colocar la etiqueta UP hacia arriba y asegurarse que las pestañas laterales quedan al mismo nivel (C). *Utilizar un nivel si fuera necesario.
Figura 2.

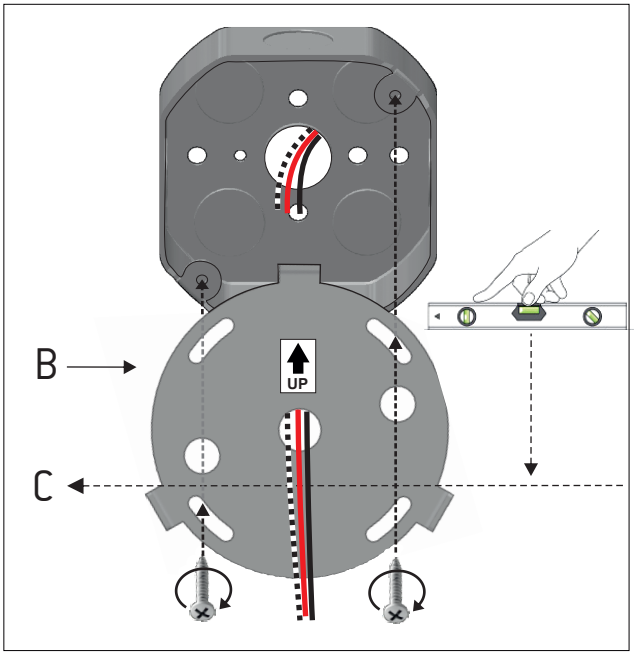

Figure 2

3 - Affix the lamp to the mounting bracket (B). Tighten the lateral screws removed previously back into the canopy (A).
Figure 3.

3 - Encajar el cuerpo de la lámpara con la sujeción (B) y roscar los tornillo liberados previamente (A) para fijar la lámpara a la caja de USA.
Figura 3.

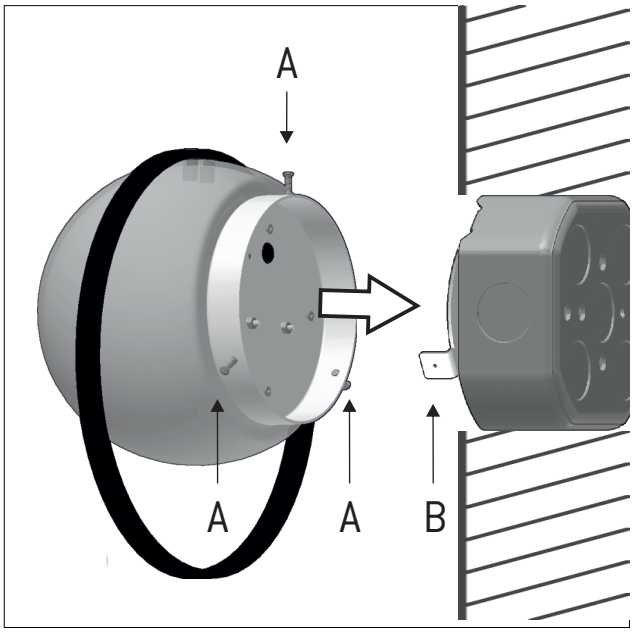

Figure 3

estiluz

A-3722X

493037224

Outdoor metallic wall lamp with polyethylene shade and an integrated dimmable LED providing direct and indirect light.

Aplique metálico de exterior con pantalla de polietileno y LED regulable integrado que proporciona luz directa e indirecta.

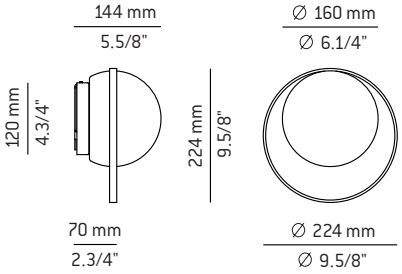

Warning

PRODUCT IS TO BE INSTALLED BY A QUALIFIED ELECTRICIAN ONLY
LE PRODUIT DOIT ÊTRE INSTALLÉ PAR UN ÉLECTRICIEN QUALIFIÉ UNIQUEMENT
EL PRODUCTO DEBE SER INSTALADO SOLO POR UN ELECTRICISTA CUALIFICADO

WE RECOMMEND TO READ THE INSTRUCTIONS ENTIRELY BEFORE BEGINNING THE INSTALLATION
PLEASE SAVE THE INSTRUCTIONS FOR FUTURE REFERENCE
* Make sure the power has been disconnected before installing the fixture.
* For indoor use only.
* Do not use alcohol or solvents to clean the lamp
* For your convenience, assembly by two people is recommended.

The light source of this luminaire is not replaceable.
Once the light source's lifecycle ends, you may contact the manufacturer.

LE RECOMENDAMOS LEA LAS INSTRUCCIONES ANTES DE PROCEDER A LA INSTALACIÓN
GUARDE LAS INSTRUCCIONES PARA FUTURAS REFERENCIAS
* Asegúrese de que la corriente está desconectada antes de conectar el aparato.
* Unicamente para uso en interiores.
* Para limpieza no utilizar alcohol ni disolventes
* Recomendamos la intervención de 2 personas para el montaje de la lámpara.

La fuente de luz de esta luminaria no es reemplazable.
Cuando la fuente de luz alcance el final de su vida, debe ponerse en contacto con el fabricante para su reparación .

UL 1598 ELECTRICAL INSTRUCTIONS FOR FLUSHMOUNTS, WALL SCONCES AND PENDANTS

SAVE THESE INSTRUCTIONS. MIN 90C SUPPLY CONDUCTORS. CAUTION-RISK OF FIRE. USE STATED WATT OR SMALLER. CAUTION-RISK OF SHOCK. DISCONNECT POWER BEFORE SERVICING. TO REDUCE THE RISK OF A BURN DURING RELAMPING, ALLOW THE BULB TO COOL DOWN. SUITABLE FOR WET LOCATION. THIS PRODUCT MUST BE INSTALLED IN ACCORDANCE WITH THE APPLICABLE INSTALLATION CODE BY A PERSON FAMILIAR WITH THE CONSTRUCTION AND OPERATION OF THE PRODUCT AND THE HAZARD INVOLVED.

WARNING: ALL WIRES AND WIRE NUTS USED IN THE INSTALLATION MUST BE RATED 195F (90ºC). FOR INDOOR AND OUTDOOR USE.
THESE PRODUCT MUST BE INSTALLED BY A QUALIFIED ELECTRICIAN.

Assembly instructions / Instrucciones

1 - Unscrew the lateral screws from the canopy (A). Remove the mounting bracket (B). Figure 1

1 - Desenroscar los tornillos laterales del tapapared (A). para liberar la sujeción (B). Figura 1.

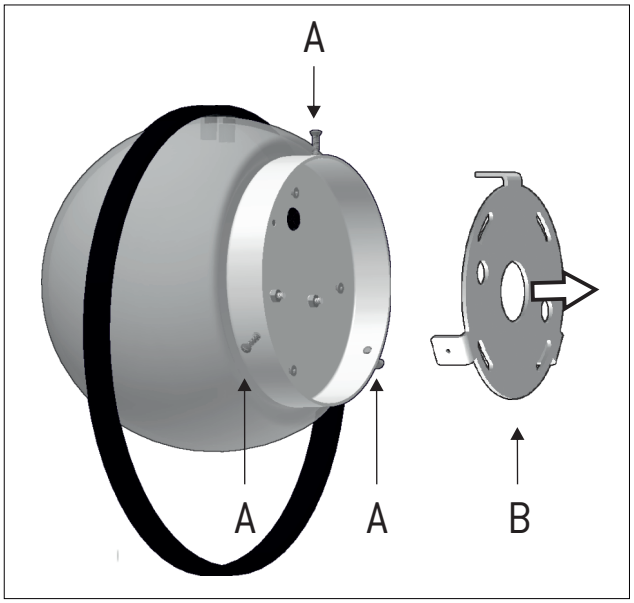

Figure 1

2 - Insert the electrical wires through the mounting bracket (B) and make the electrical conections inside the junction box suitable for outdoor installations.
Figure 2.

2 - Pasar los cables de la red eléctrica por el interior de la sujeción (B) y realizar las conexiones eléctricas dentro de la caja de conexiones adaptada para su instalación en exterior.
Figura 2.

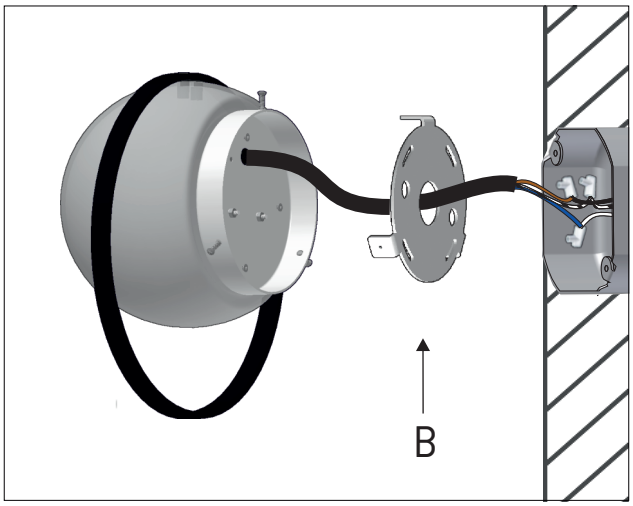

Figure 2

3 - Fix the mounting bracket (B) to the junction box (D).
Attention: place the **UP label** to the top and make sure that the side tabs are at the same level (E). * Use a level if it is necessary.
Figure 3.

3 - Fijar la sujeción (B) a la caja de conexiones (D).
Atención: colocar la **etiqueta UP** hacia arriba y asegurarse que las pestañas laterales quedan al mismo nivel (E). *Utilizar un nivel si fuera necesario.
Figura 3.

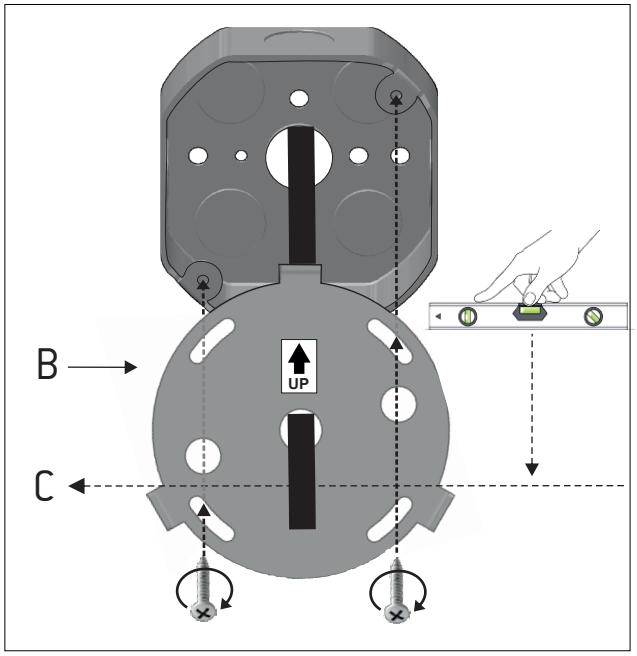

Figure 3

4 - Affix the lamp to the mounting bracket (B). Tighten the lateral screws removed previously back into the canopy (A).
Figure 4.

4 - Encajar el cuerpo de la lámpara con la sujeción (B) y roscar los tornillo liberados previamente (A) para fijar la lámpara a la caja de USA.
Figura 4.

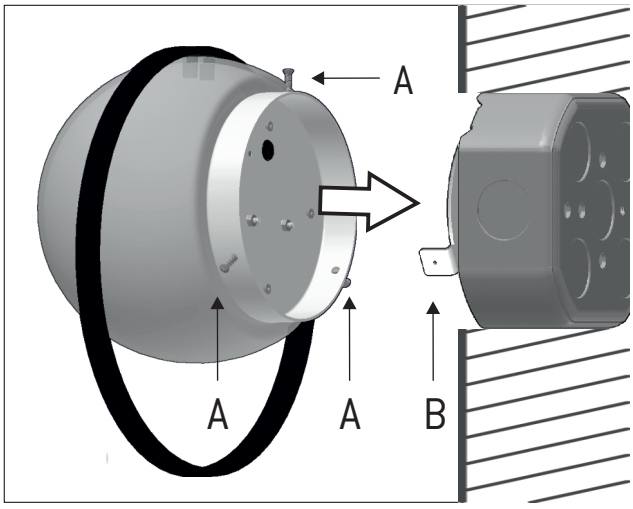

Figure 4